BENEFITS

- ESD protection for high frequency applications (HDMI 1.4)
- Smaller form factor for board space savings
- Helps protect electronic circuits against damage from electrostatic discharge (ESD) events
- Assists equipment to pass IEC 61000-4-2, level 4 testing

FEATURES

- 0.15 pF (typ) Capacitance
- Low leakage current
- Low clamping voltage
- Fast response time (<1ns)
- Capable of withstanding numerous ESD strikes
- Compatible with standard reflow installation procedures
- Thick film technology
- Bi-directional protection

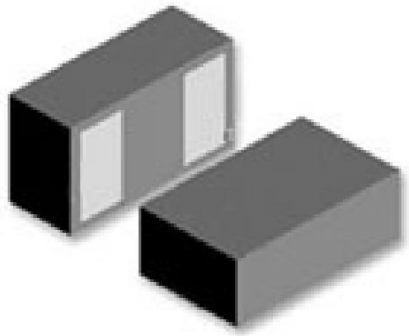

APPLICATIONS

- HDMI 1.4 interface
- LCD, HDTV
- Cellular phones
- Antennas (cell phones, GPS…)
- Portable video devices (PDA, DSC, Bluetooth…)
- Printer ports
- High speed Ethernet
- USB 3.0 and IEEE 1394 interfaces
- DVI interface

TYPICAL DEVICE RATINGS AND CHARACTERISTICS

Symbol	Continuous Max Operating Voltage	Typical TLP Trigger Voltage[1]	Typical TLP Clamping Voltage[1] after 30ns	Typical Capacitance[2] @ 1 MHz, $1V_{rms}$	Typical Leakage Current @$14V_{DC}$	Max Leakage Current @$14V_{DC}$
	V_{DC}	$V_{T(TLP)}$	$V_{C(TLP\ 30)}$	Cp	$I_{L(Typ)}$	$I_{L(MAX)}$
Unit	V	V	V	pF	μA	μA
Value	15	250	40	0.15	<0.01	10.0

Note 1: TLP test method at 1000V (refer to FIG. 5 on page 5)
Note 2: Typical capacitance @ 0V and 40V bias

GENERAL CHARACTERISTICS

Operating temperature: -55°C to +125°C
Storage temperature: -40°C to +85°C

ESD voltage capability (tested per IEC 61000-4-2)

- Contact discharge mode: 8kV (typ), 15kV (max)
- Air discharge mode: 15kV (typ), 30kV (max) [1 pulse: per customer request]

ESD pulse withstand: Typically 100 pulses (tested per IEC 61000-4-2, level 4, and contact method)

Environmental Specifications

Test Conditions	Bias Humidity Test	Thermal Shock	Bias Heat Test	Bias Low Temp Test	Solderability	Solder Heat	Vibration	Mechanical Shock	Solvent Resistance
	@ 85°C @ 85% RH V_{DC} (max) 1000 hours	-55°C to 125°C 30min dwell 1000 cycles	@ 125°C V_{DC} (max) 1000 hours	@ -55°C V_{DC} (max) 1000 hours	250 °C +/- 5 °C 3s +/- 1s	260 °C,10s	10 to 50Hz, 60s cycle, 2hrs each in X-Y-Z axis	1500G, 0.5ms, X-Y-Z axis 3 times	IPA ultrasonic 300s
Pass/Fail Criteria	I_L≤10μA	I_L≤10μA	I_L≤10μA	I_L≤10μA	95% coverage	90% coverage	No Physical Damage I_L ≤ 10 μA	No Physical Damage I_L ≤ 10 μA	No Physical Damage I_L ≤ 10 μA

FIG 1: CAPACITANCE VS. FREQUENCY (TYPICAL SAMPLE)

(Flat Response of Capacitance over Frequency Range)

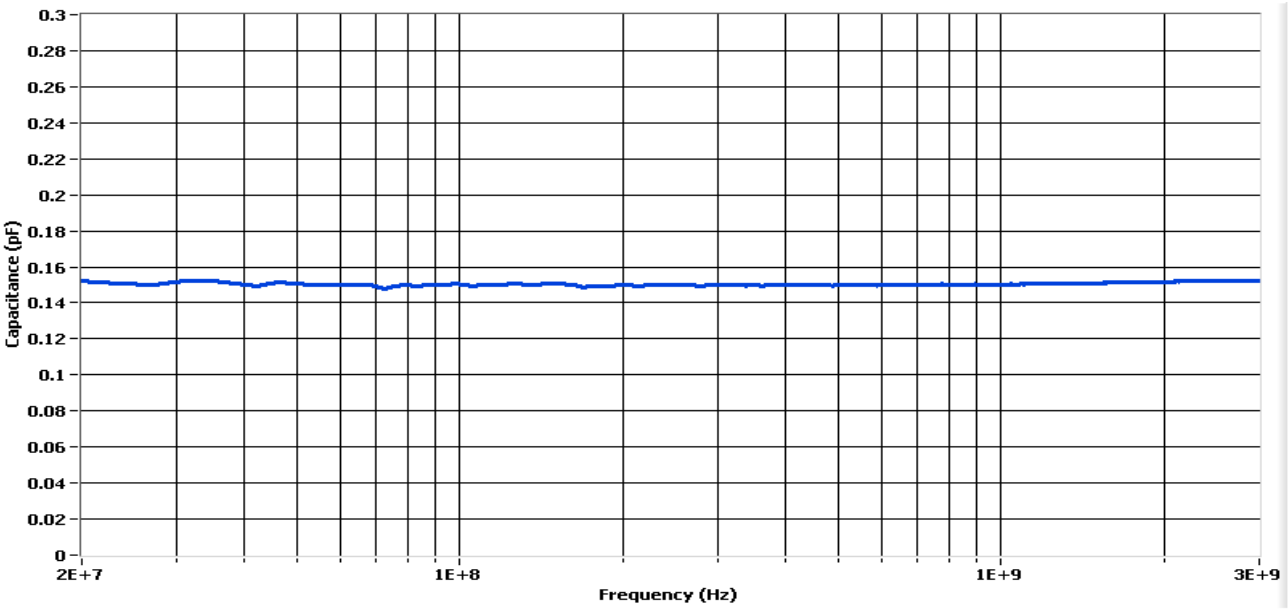

FIG 2: EYE DIAGRAM (TYPICAL SAMPLE)

(Eye Diagram Performance at 3.4 GHz— meets criteria for HDMI 1.4)

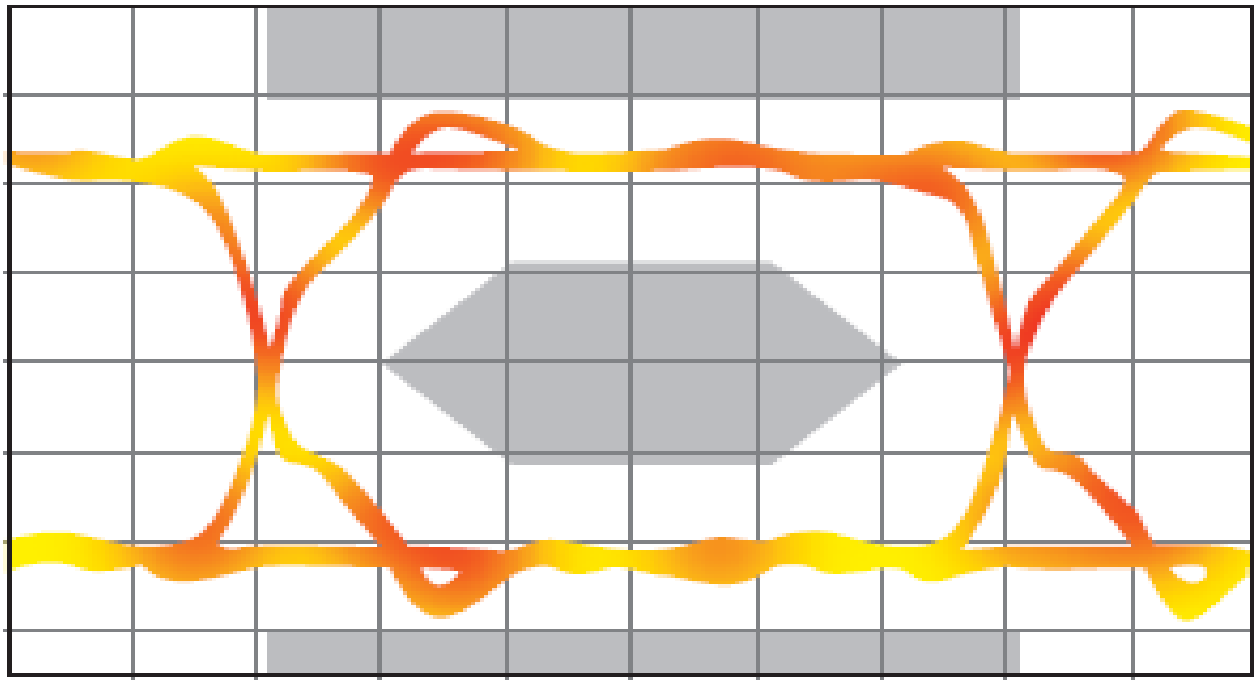

FIG 3: INSERTION LOSS DIAGRAM (TYPICAL SAMPLE)

(Minimal Insertion Loss at 3.4 GHz)

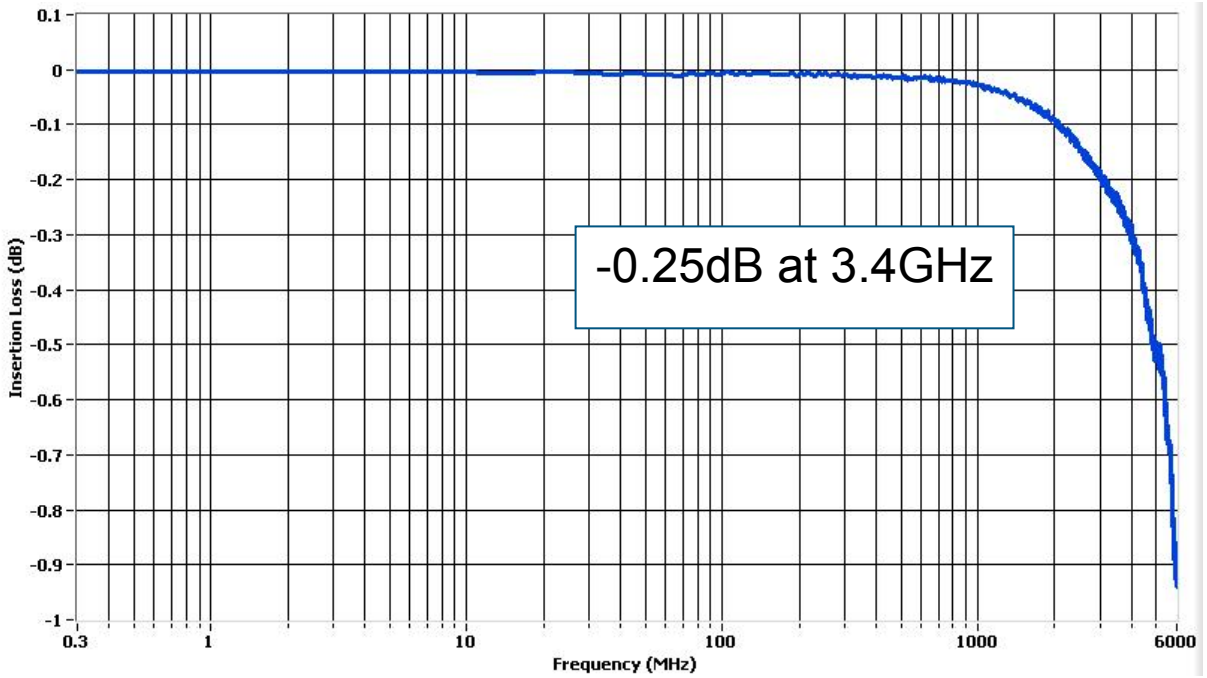

FIG 4: ESD PROTECTION FOR HDMI

Reference Layout and Test Results available)

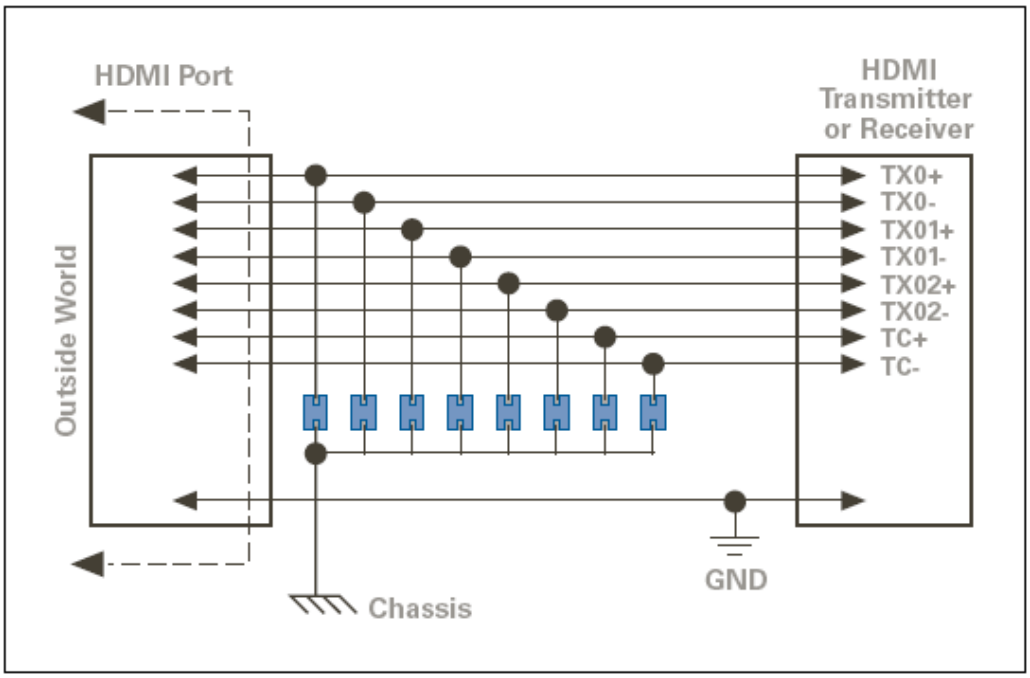

FIG 5: TYPICAL TRANSMISSION LINE PULSE RESPONSE GRAPH

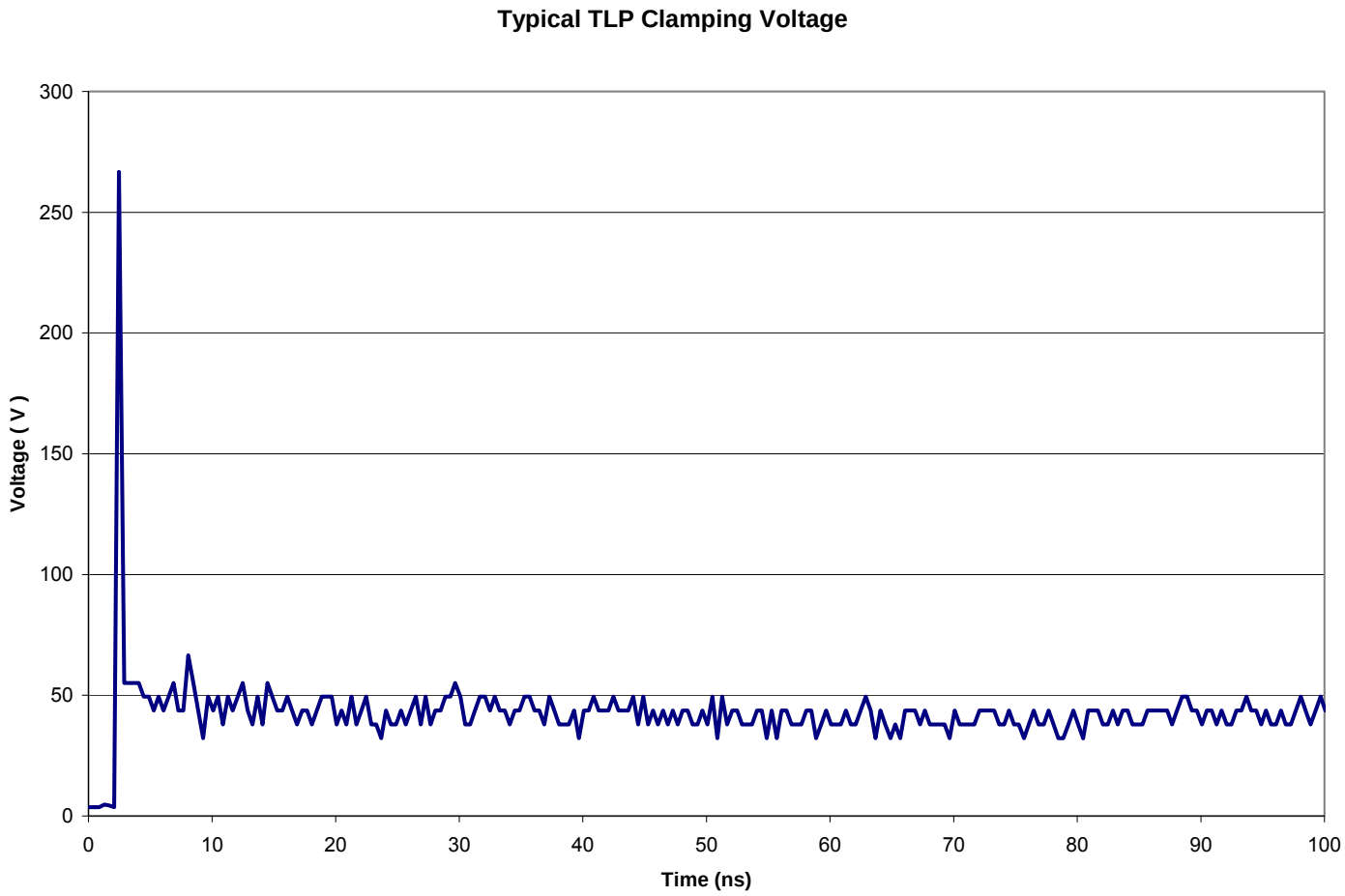

Product Dimension

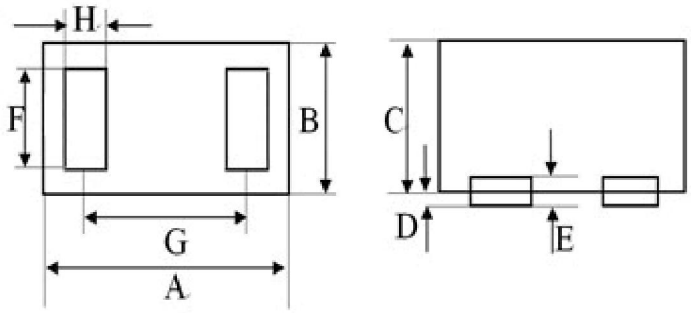

Dim	millmeters	
	min	max
A	0.90	1.20
B	0.45	0.65
C	0.30	0.40
D	0.00	0.05
E	0.125REF	
F	0.40	0.50
G	0.65BSC	
H	0.25	0.35

PAD Dimension

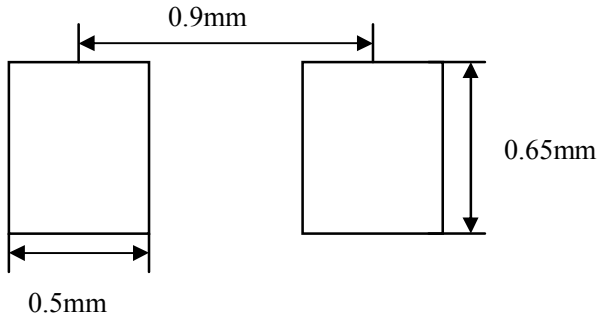

Solder thickness 0.15 to 0.2mm

SOLDER REFLOW RECOMMENDATIONS:
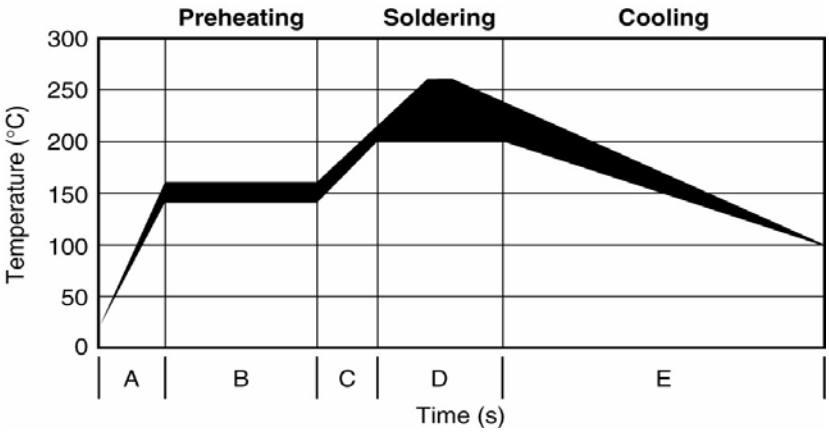
A	Temperature ramp up 1	From ambient to Preheating temperature	30s to 60s
B	Preheating	140°C - 160°C	60s to 120s
C	Temperature ramp up 2	From Preheating to Main heating temperature	20s to 40s
D	Main heating	at 200°C at 220°C at 240°C at 260°C	60s ~ 70s 50s ~ 60s 30s ~ 40s 5s ~ 10s
E	Cooling	From main heating temperature to 100°C	4°C/s (max)